PRODUCT DATASHEET

DIN 41626 PLUG TO BNC JACK BULKHEAD ADAPTER

74-1028-535

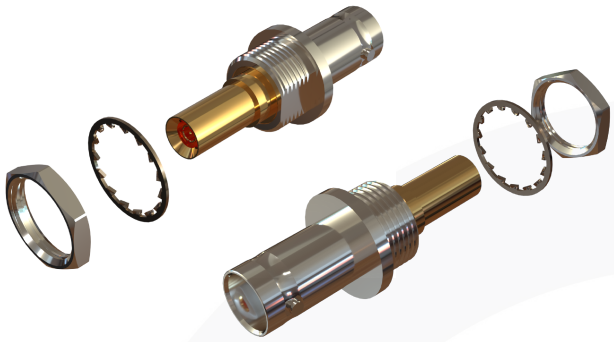

images for illustration purposes only

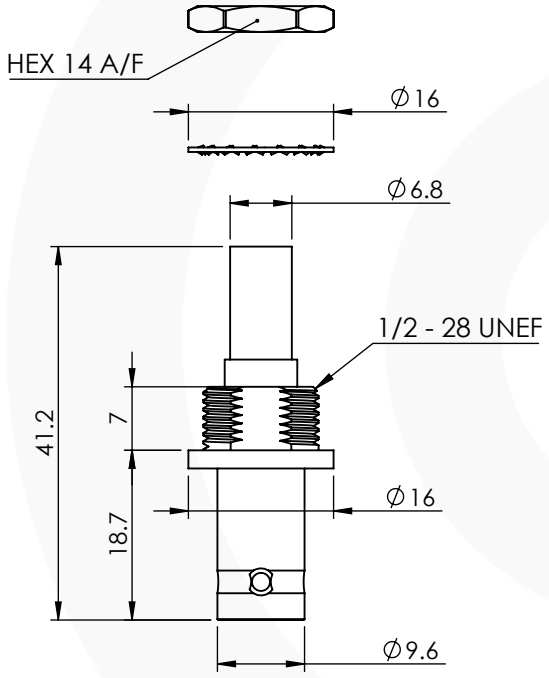

RECOMMENDED PANEL CUTOUT:

MAX PANEL THICKNESS : 3.5mm

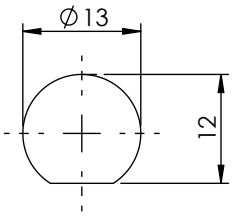

Environmental Specification

Operating Temp: -55 to +155 Deg C.

IP Rating (Mated): NONE

Electrical Specification

Impedance: 50 Ohm

Frequency: 0-2 GHz

Dielectric W/V: 750 Veff

Insulation res: 2000 M-Ohm

Mechanical Specification

Contact Retention: 10 N min

Cable Retention: Not Applicable

Mating cycles: 500

Weight: 17.02 g

Connector Interface

image for illustration purposes only

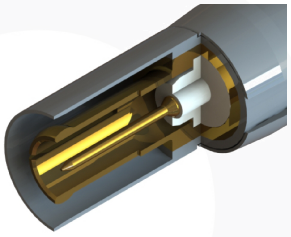

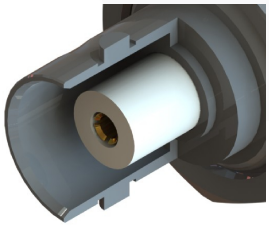

ITEM	DESCRIPTION	MATERIAL	PLATING
7	LOCKWASHER	SK5	NICKEL
6	NUT	BRASS	NICKEL
5	DIN BODY	BRASS	GOLD
4	TINE	BERYLLIUM COPPER	GOLD
3	INSULATOR	PTFE	N/A
2	CENTRE CONTACT	BERYLLIUM COPPER	GOLD
1	BNC BODY	BRASS	NICKEL

A4	SHEET 1 OF 1		DIMENSIONS ARE IN MILLIMETRES	
REVISION : A00			NAME	SIGNATURE	DATE
ISSUE : 1		DRAWN	G.E.		24/11/2026
		CHK'D	P.S.		24/11/2026
		APPV'D			

6-8 COLNE ROAD,
TWICKENHAM,
MIDDLESEX.
TW1 4JR

THE INFORMATION IS GIVEN AS AN INDICATION ONLY AND IS SUBJECT TO CHANGE WITHOUT NOTICE. IN THE CONTINUAL GOAL TO IMPROVE OUR PRODUCTS,WE RESERVE THE RIGHT TO MAKE ANY MODIFICATIONS NECESSARY WITHOUT PRIOR NOTICE.

© 2013. THIS DOCUMENT IS THE PROPERTY OF COAX CONNECTORS LTD. REPRODUCTION OR COMMUNICATION IN ANY FORM TO A THIRD PARTY IS PROHIBITED WITHOUT PRIOR WRITTEN CONSENT

Model File: C:\Fusion Components Ltd\CAD Data\Solid Models\Z - Match IT SERIES\TOP LEVEL\BNC 11329

Cad File: C:\Fusion Components Ltd\CAD Data\Drawings\Z - Match IT SERIES\DATA SHEETS\74-1028-535