PRODUCT DATASHEET

1.6 / 5.6 RIGHT ANGLE BULKHEAD SOLDER / CRIMP JACK

53-271-B6-BD

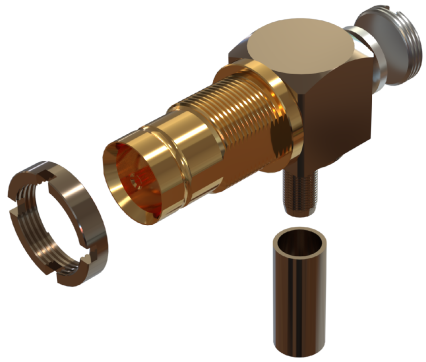

images for illustration purposes only

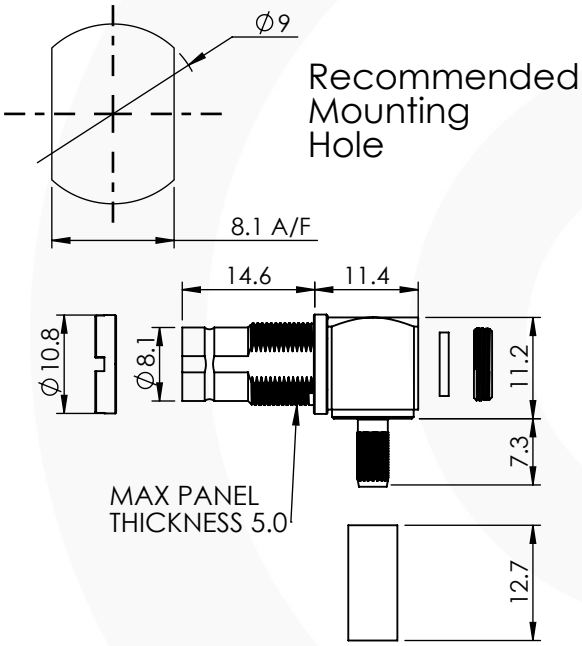

ITEM	DESCRIPTION	MATERIAL	PLATING
7	REAR BODY	BRASS	NICKEL
6	NUT	BRASS	NICKEL
5	CAP	BRASS	NICKEL
4	CRIMP SLEEVE	BRASS	NICKEL
3	INSULATOR	PTFE	N/A
2	CENTRE CONTACT	BeCu	GOLD
1	FRONT BODY	BRASS	GOLD

A4	SHEET 1 OF 1		DIMENSIONS ARE IN MILLIMETRES	
REVISION : A00			NAME	SIGNATURE	DATE
ISSUE : 2		DRAWN	IG		01/08/2011
		CHK'D	GE		08/08/2011
		APPV'D			

6-8 COLNE ROAD, TWICKENHAM, MIDDLESEX. TW1 4JR

THE INFORMATION IS GIVEN AS AN INDICATION ONLY AND IS SUBJECT TO CHANGE WITHOUT NOTICE. IN THE CONTINUAL GOAL TO IMPROVE OUR PRODUCTS,WE RESERVE THE RIGHT TO MAKE ANY MODIFICATIONS NECESSARY WITHOUT PRIOR NOTICE.

Suitable for Cables:

BT3002, TZC75024, TZC75025

Stripping Dimensions

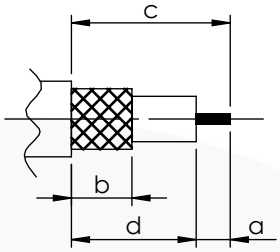

a = 2.0 mm
b = 8.0 mm
c = 16.0 mm
d = 14.0 mm

* CUT FOIL TO DIM. "b"

Assembly Procedure: AP017

Tooling

Centre Contact: Solder — Tool No: Not Applicable

Crimp Sleeve: Hex 4.52mm A/F — Tool No: VC Die Set or HTS-43

Alignment Tool: Not Applicable — Extraction: Not Applicable

Environmental Specification

Operating Temp: -55 to +155 Deg C.

IP Rating (Mated):

Electrical Specification

Impedance: 75 Ohm

Frequency: 0-2 GHz

Dielectric W/V: 1500 Veff

Insulation res: 5000 M-Ohm

Mechanical Specification

Contact Retention: 27 N min

Cable Retention: 150 N min

Mating cycles: 250

Weight: 3.80 g

Connector Interface

image for illustration purposes only

© 2025. THIS DOCUMENT IS THE PROPERTY OF COAX CONNECTORS LTD. REPRODUCTION OR COMMUNICATION IN ANY FORM TO A THIRD PARTY IS PROHIBITED WITHOUT PRIOR WRITTEN CONSENT

Cad File: C:\Fusion Components Ltd\CAD Data\Drawings\Z - Match IT SERIES\DATA SHEETS\53-271-B6-BD

Model File: C:\Fusion Components Ltd\CAD Data\Solid Models\Z - Match IT SERIES\TOP LEVEL\1656 10174

Tel: +44(0)20 8538 9090

Email: info@coax-connectors.com