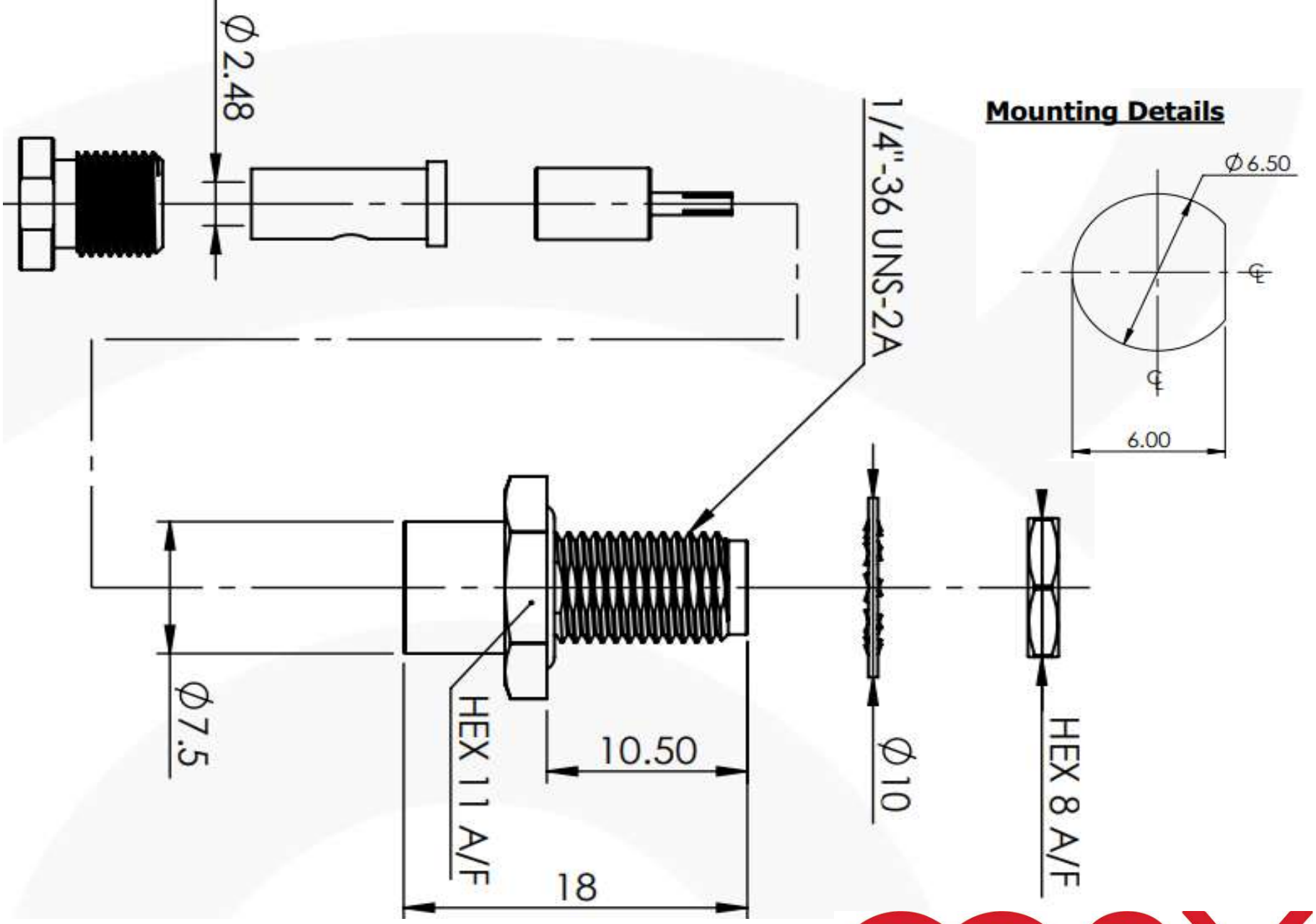

ASSEMBLED LENGTH = 22.5mm

images for illustration purposes only

Part Number: 30K-081-HP3-HA

COAX CONNECTORS LTD