PRODUCT DATASHEET

MICRO BNC STRAIGHT CRIMP / CRIMP JACK

67-054-B66-FA

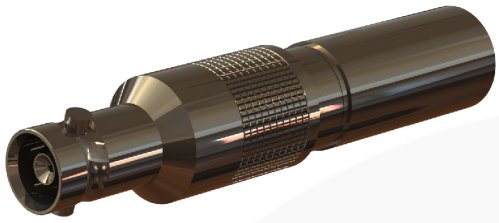

images for illustration purposes only

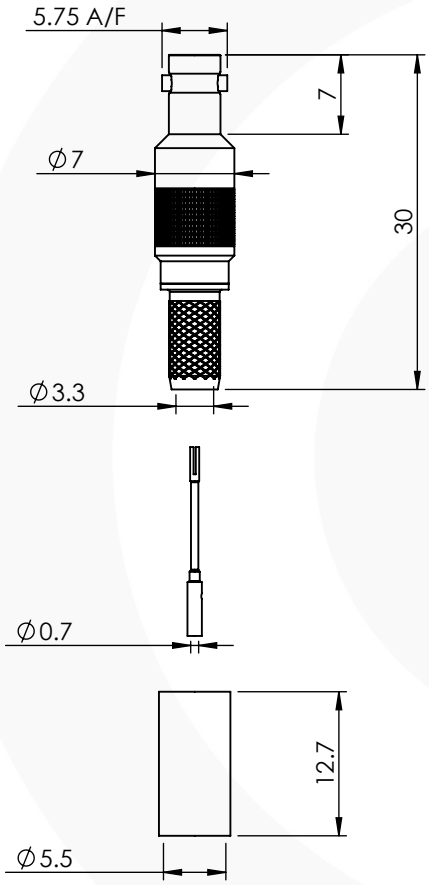

Suitable for Cables:

(FA) Belden 1855ENH, Draka0.6/2.8AF, Bryant BDSD01, Image360, Conducfil 9890, Percon VK5

Stripping Dimensions

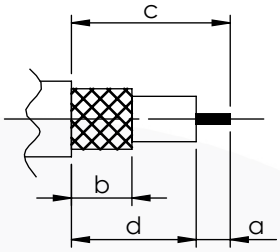

a = 4.0 mm
b = 8.0 mm
c = 16.0 mm
d = 12.0 mm

* CUT FOIL TO DIM. "b"

Assembly Procedure: AP001

Tooling

Centre Contact: Indent or SQ 0.95mm A/F Tool No: 96-HTS-75A

Crimp Sleeve: Hex 5.41mm A/F Tool No: 96-HTS-75A

Alignment Tool: Not Applicable Extraction: 96-1132

Environmental Specification

Operating Temp: -55 to +155 Deg C.

IP Rating (Mated): IP 64

Electrical Specification

Impedance: 75 Ohm

Frequency: 0-6 GHz

Dielectric W/V: 1000 Veff

Insulation res: 10000 M-Ohm

Mechanical Specification

Contact Retention: 10 N min

Cable Retention: 150 N min

Mating cycles: 500

Weight: 4.58 g

Connector Interface

image for illustration purposes only

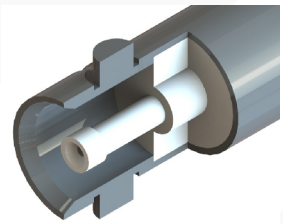

ITEM	DESCRIPTION	MATERIAL	PLATING
4	CRIMP SLEEVE	BRASS	NICKEL
3	INSULATOR	PTFE	N/A
2	CENTRE CONTACT	BERYLLIUM COPPER	GOLD
1	BODY	BRASS	NICKEL

A4	SHEET 1 OF 1	DIMENSIONS ARE IN MILLIMETRES		
REVISION : B01		NAME	SIGNATURE	DATE
ISSUE : 2	DRAWN	IG		28/07/2015
	CHK'D	GE		29/07/2015
	APPV'D			

6-8 COLNE ROAD, TWICKENHAM, MIDDLESEX. TW1 4JR

THE INFORMATION IS GIVEN AS AN INDICATION ONLY AND IS SUBJECT TO CHANGE WITHOUT NOTICE. IN THE CONTINUAL GOAL TO IMPROVE OUR PRODUCTS,WE RESERVE THE RIGHT TO MAKE ANY MODIFICATIONS NECESSARY WITHOUT PRIOR NOTICE.

© 2013. THIS DOCUMENT IS THE PROPERTY OF COAX CONNECTORS LTD. REPRODUCTION OR COMMUNICATION IN ANY FORM TO A THIRD PARTY IS PROHIBITED WITHOUT PRIOR WRITTEN CONSENT

Cad File: C:\Fusion Components Ltd\CAD Data\Drawings\Z - Match IT SERIES\DATA SHEETS\67-054-B66-FA

Model File: C:\Fusion Components Ltd\CAD Data\Solid Models\Z - Match IT SERIES\TOP LEVEL\MICRO BNC 10517

Tel: +44(0)20 8538 9090 Fax: +44(0)20 8538 9890 Email: info@coax-connectors.com