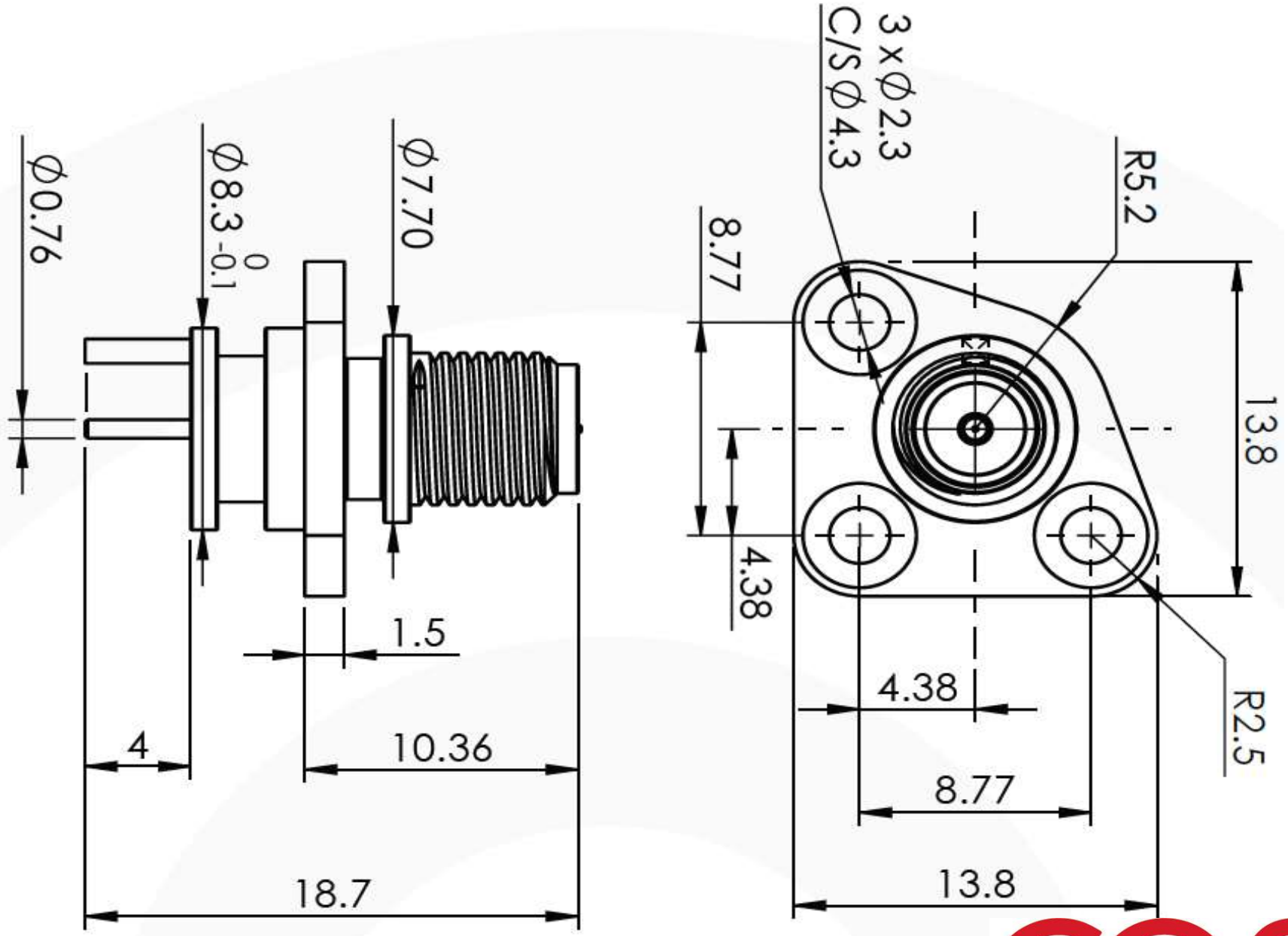

images for illustration purposes only

Part Number: 31-389-J3

COAX CONNECTORS LTD