PRODUCT DATASHEET

BNC INSULATED BULKHEAD JACK TO JACK ADAPTOR

10-503-A6

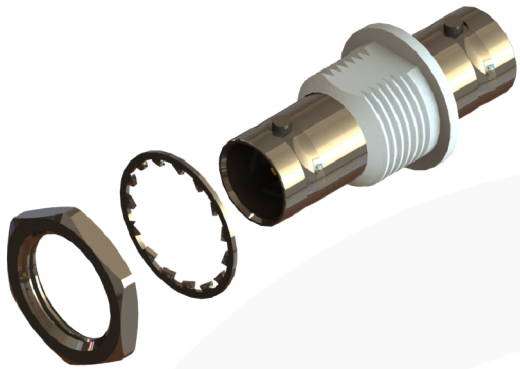

images for illustration purposes only

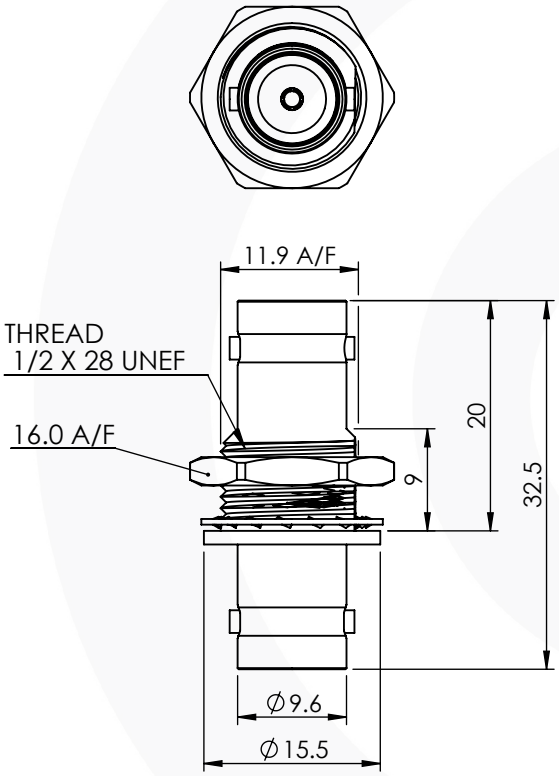

ITEM	DESCRIPTION	MATERIAL	PLATING
6	WASHER	SK5	NICKEL
5	NUT	BRASS	NICKEL
4	INSULATION	ABS	N/A
3	INSULATOR	DERLIN	N/A
2	CENTRE CONTACT	PHOS. BRONZE	GOLD
1	BODY	BRASS	NICKEL

A4	SHEET 1 OF 1	RoHS 2002/95/EC	DIMENSIONS ARE IN MILLIMETRES	
REVISION :	A00	NAME	SIGNATURE	DATE
ISSUE :	2	DRAWN G.E.		29-Jul-10
		CHK'D I.G.		29-Jul-10
		APPV'D		

6-8 COLNE ROAD,
TWICKENHAM,
MIDDLESEX.
TW1 4JR

THE INFORMATION IS GIVEN AS AN INDICATION ONLY AND IS SUBJECT TO CHANGE WITHOUT NOTICE. IN THE CONTINUAL GOAL TO IMPROVE OUR PRODUCTS,WE RESERVE THE RIGHT TO MAKE ANY MODIFICATIONS NECESSARY WITHOUT PRIOR NOTICE.

Suitable for Cables:

N/A

Environmental Specification

Operating Temp: -35 to +70 Deg C

IP Rating (Mated): IP 64

Electrical Specification

Impedance: 75 Ohm

Frequency: 0 - 6 GHz

Dielectric W/V: 1500 Veff

Insulation res: 5000 M-Ohm

Mechanical Specification

Contact Retention: 10 N min

Cable Retention: N/A

Mating cycles: 500

Weight: 14.34 g

Recommended Mounting Hole

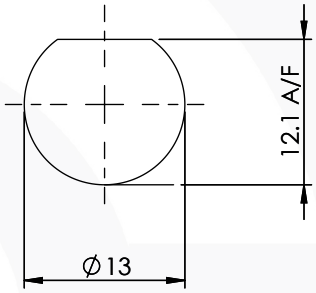

5.0 MAX PANEL THICKNESS

Connector Interface

image for illustration purposes only

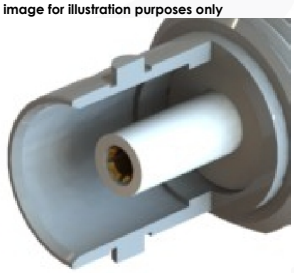

Performance

-11.02 dB @ 1.0 GHz

-12.45 dB @ 3.0 GHz

-16.16 dB @ 4.5 GHz

-25.79 dB @ 6.0 GHz

Return Loss Graph

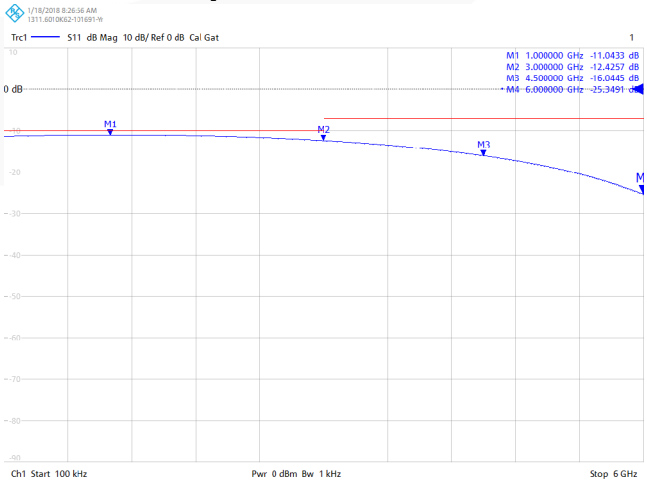

© 2013. THIS DOCUMENT IS THE PROPERTY OF COAX CONNECTORS LTD. REPRODUCTION OR COMMUNICATION IN ANY FORM TO A THIRD PARTY IS PROHIBITED WITHOUT PRIOR WRITTEN CONSENT

Cad File: C:\Fusion Components Ltd\CAD Data\Drawings\Z - Match IT SERIES\DATA SHEETS\10-503-A6

Model File: C:\Fusion Components Ltd\CAD Data\Solid Models\TOP LEVELS\10-503-A6

Tel: +44(0)20 8538 9090 Fax: +44(0)20 8538 9890 Email: info@coax-connectors.com