PRODUCT INTERFACE: SMP (CATCHERS MIT)

REFERENCE ONLY

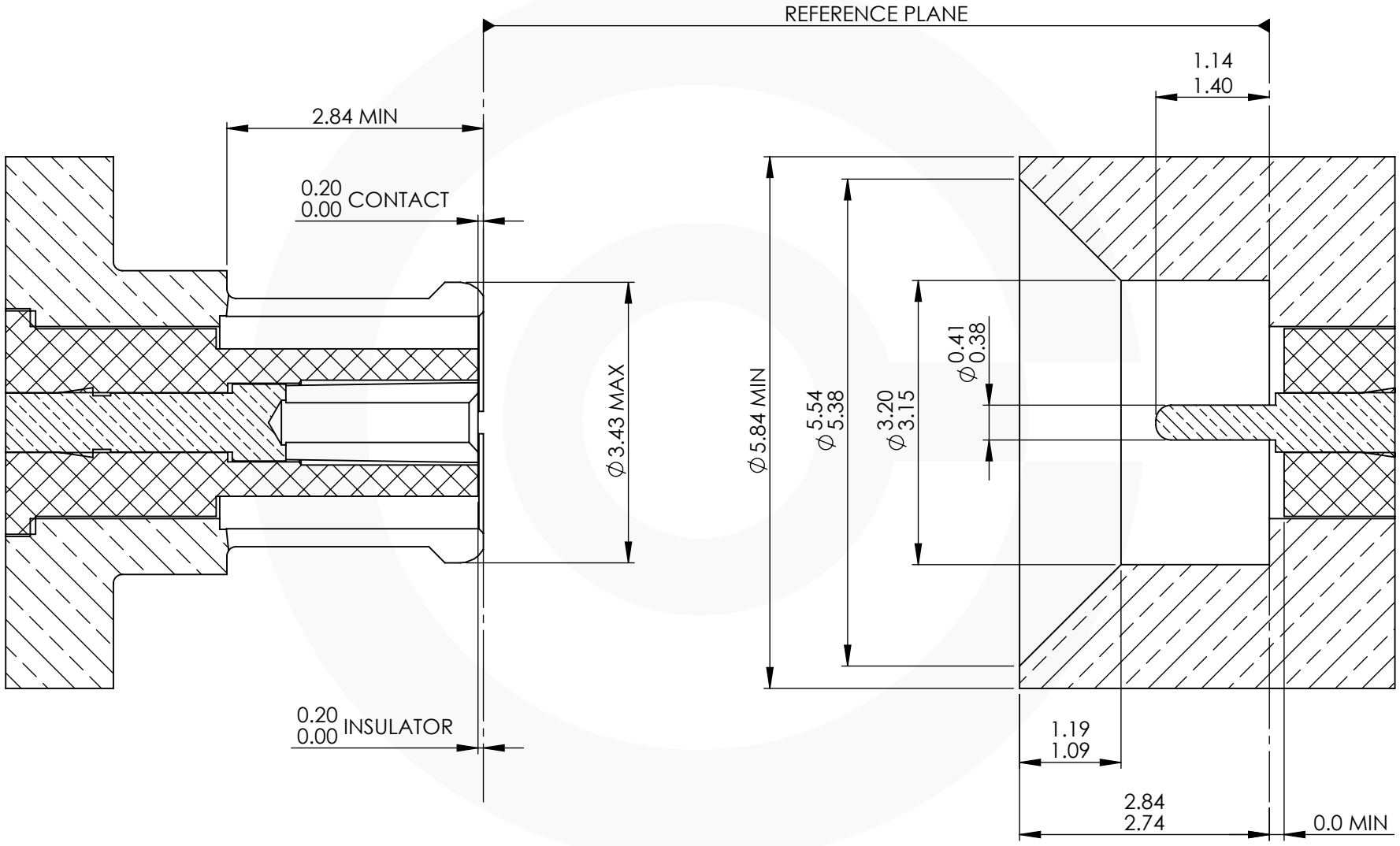

PLUG **JACK**

COAX

COAX CONNECTORS LTD
6-8 COLNE ROAD,
TWICKENHAM,
MIDDLESEX.
TW1 4JR

THE INFORMATION IS GIVEN AS AN INDICATION ONLY AND IS SUBJECT TO CHANGE WITHOUT NOTICE. IN THE CONTINUAL GOAL TO IMPROVE OUR PRODUCTS,WE RESERVE THE RIGHT TO MAKE ANY MODIFICATIONS NECESSARY WITHOUT PRIOR NOTICE.

DIMENSIONS ARE IN MILLIMETRES	SHEET 1 OF 1	A4L	NAME	SIGNATURE	DATE
REVISION :	A00	DRAWN			11/06/2018
ISSUE :	1	CHK'D			11/06/2018
		APPV'D			

© 2015. THIS DOCUMENT IS THE PROPERTY OF COAX CONNECTORS LTD. REPRODUCTION OR COMMUNICATION IN ANY FORM TO A THIRD PARTY IS PROHIBITED WITHOUT PRIOR WRITTEN CONSENT

Cad File: M:\Engineering Data\CAD Data\Drawings\WEB INTERFACES\C - SMP

Model File: M:\Engineering Data\CAD Data\Drawings\WEB INTERFACES\smp

Tel: +44(0)20 8538 9090 Fax: +44(0)20 8538 9890 Email: info@coax-connectors.com