# PRODUCT INTERFACE 75 Ohm MMCX RANGE

**REFERENCE ONLY**

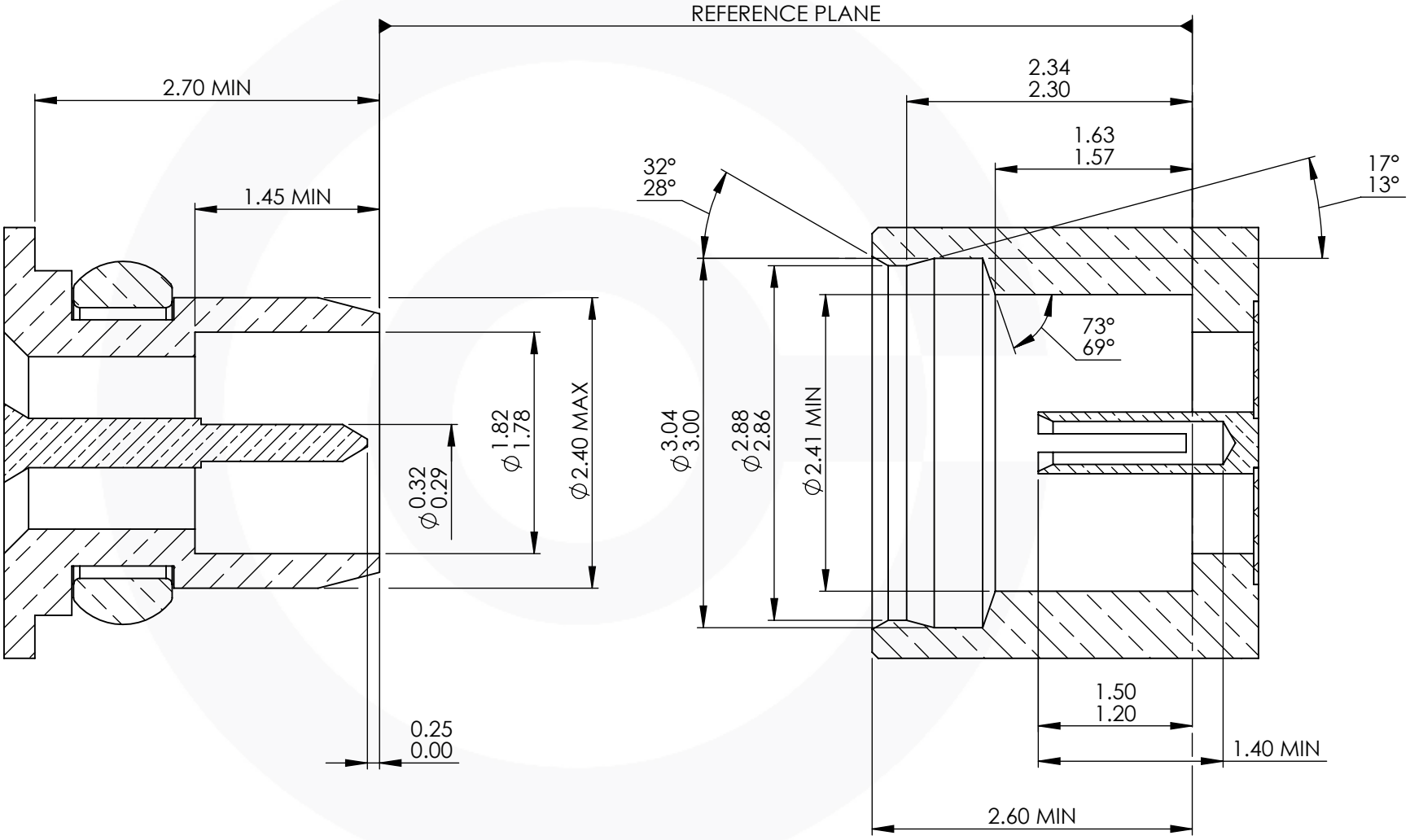


PLUG

JACK

| | | | | | | | |
|---|---|---|---|---|---|---|---|
| COAX | COAX CONNECTORS LTD<br>6-8 COLNE ROAD,<br>TWICKENHAM,<br>MIDDLESEX.<br>TW1 4JR | THE INFORMATION IS GIVEN AS AN INDICATION ONLY AND IS SUBJECT TO CHANGE WITHOUT NOTICE. IN THE CONTINUAL GOAL TO IMPROVE OUR PRODUCTS,WE RESERVE THE RIGHT TO MAKE ANY MODIFICATIONS NECESSARY WITHOUT PRIOR NOTICE. | DIMENSIONS ARE IN MILLIMETRES | SHEET 1 OF 1 | A4L | NAME | SIGNATURE | DATE |
| | | | REVISION : | A00 | DRAWN | GE | | 12/08/13 |
| | | | ISSUE : | 1 | CHK'D | IG | | 12/08/13 |
| | | | | | APPV'D | | | |

Tel: +44(0)20 8538 9090 Fax: +44(0)20 8538 9890 Email: info@coax-connectors.com

© 2013. THIS DOCUMENT IS THE PROPERTY OF COAX CONNECTORS LTD. REPRODUCTION OR COMMUNICATION IN ANY FORM TO A THIRD PARTY IS PROHIBITED WITHOUT PRIOR WRITTEN CONSENT

Model File: C:\Fusion Components Ltd\CAD Data\Drawings\WEB INTERFACES\75 Ohm MMCX

Cad File: C:\Fusion Components Ltd\CAD Data\Drawings\WEB INTERFACES\C - 75 Ohm MMCX