PRODUCT DATASHEET

MICRO BNC 75ohm RIGHT ANGLE PCB JACK OFFSET HSG

92-67-468-3-BSn126

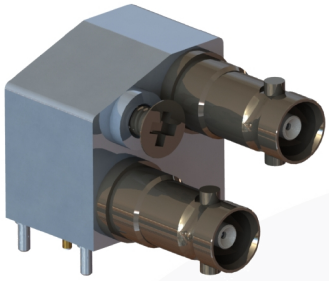

images for illustration purposes only

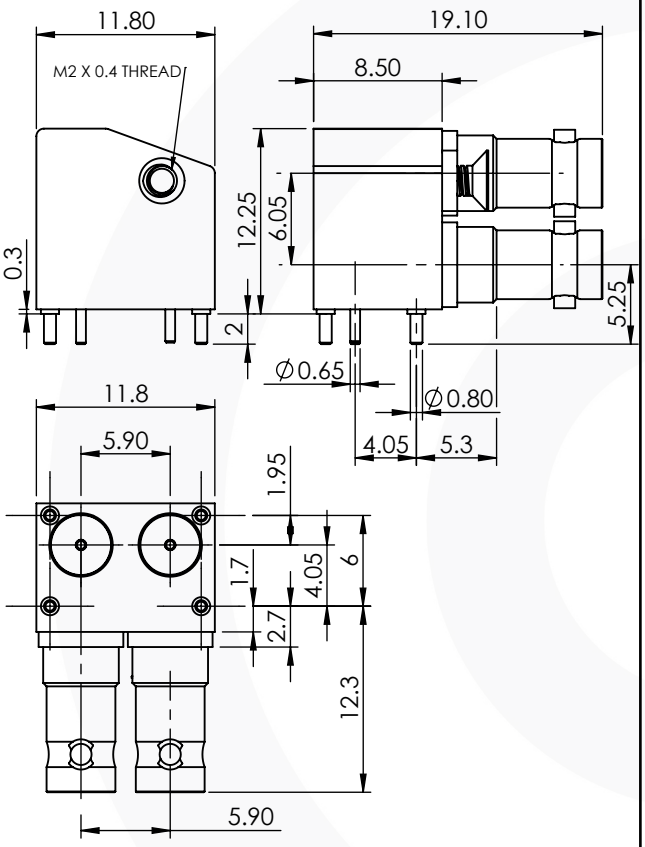

ITEM	DESCRIPTION	MATERIAL	PLATING
8	INSULATOR	PTFE	N/A
7	M2x5 CSK CROSS HD SCREW	A2 STAINLESS	N/A
6	INSULATOR	PTFE	N/A
5	INSULATOR	PTFE	N/A
4	CENTRE CONTACT	BERYLLIUM COPPER	GOLD
3	CENTRE CONTACT	BERYLLIUM COPPER	GOLD
2	BODY	BRASS	NICKEL
1	REAR BODY	BRASS	TIN

A4	SHEET 1 OF 1		DIMENSIONS ARE IN MILLIMETRES	
REVISION : A01			NAME	SIGNATURE	DATE
ISSUE : 1		DRAWN	BS		30/05/2018
		CHK'D	IG		07/06/2018
		APPV'D			

6-8 COLNE ROAD,
TWICKENHAM,
MIDDLESEX.
TW1 4JR

THE INFORMATION IS GIVEN AS AN INDICATION ONLY AND IS SUBJECT TO CHANGE WITHOUT NOTICE. IN THE CONTINUAL GOAL TO IMPROVE OUR PRODUCTS,WE RESERVE THE RIGHT TO MAKE ANY MODIFICATIONS NECESSARY WITHOUT PRIOR NOTICE.

Recommended PCB Layout

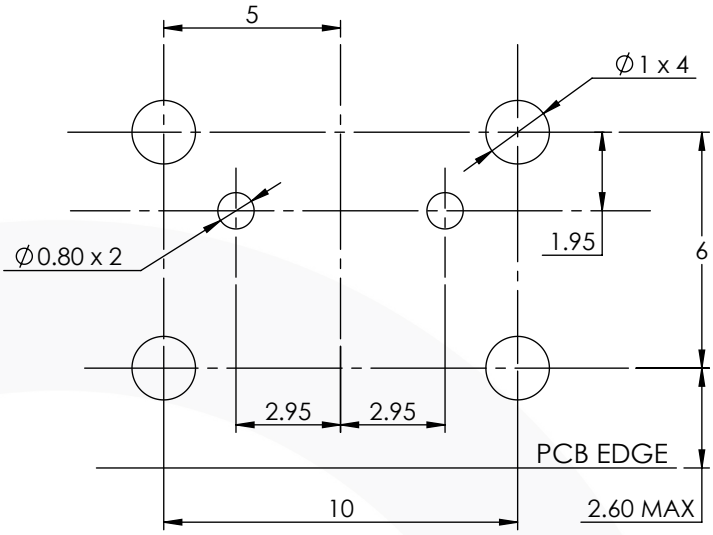

Recommended Panel Layout (IN 2.5mm PANEL)

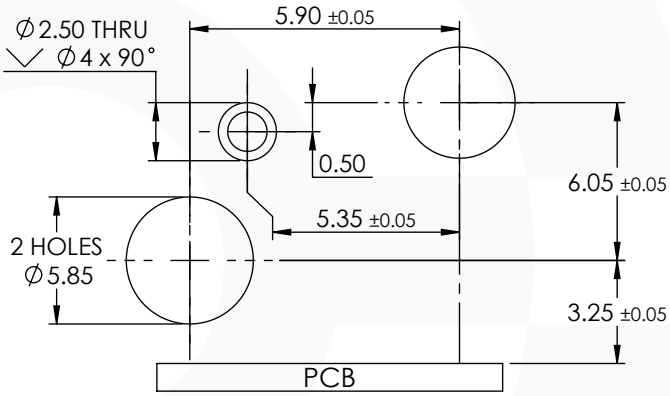

Environmental Specification

Operating Temp: -55 to +155 Deg C.

IP Rating (Mated): IP 64

Electrical Specification

Impedance: 75 Ohm

Frequency: 0-12 GHz

Dielectric W/V: 1000 Veff

Insulation res: 10000 M-Ohm

Mechanical Specification

Contact Retention: 20 N min

Cable Retention: Not Applicable

Mating cycles: 500

Weight: 9.50 g

Connector Interface

image for illustration purposes only

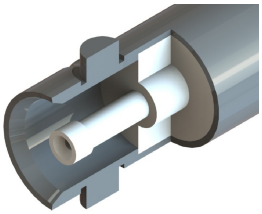

© 2013. THIS DOCUMENT IS THE PROPERTY OF COAX CONNECTORS LTD. REPRODUCTION OR COMMUNICATION IN ANY FORM TO A THIRD PARTY IS PROHIBITED WITHOUT PRIOR WRITTEN CONSENT

Cad File: M:\Engineering Data\CAD Data\Drawings\Z - Match IT SERIES\DATA SHEETS\92-67-468-3-BSn126

Model File: M:\Engineering Data\CAD Data\Solid Models\Z - Match IT SERIES\TOP LEVEL\MICRO BNC 10831

Tel: +44(0)20 8538 9090 Fax: +44(0)20 8538 9890 Email: info@coax-connectors.com