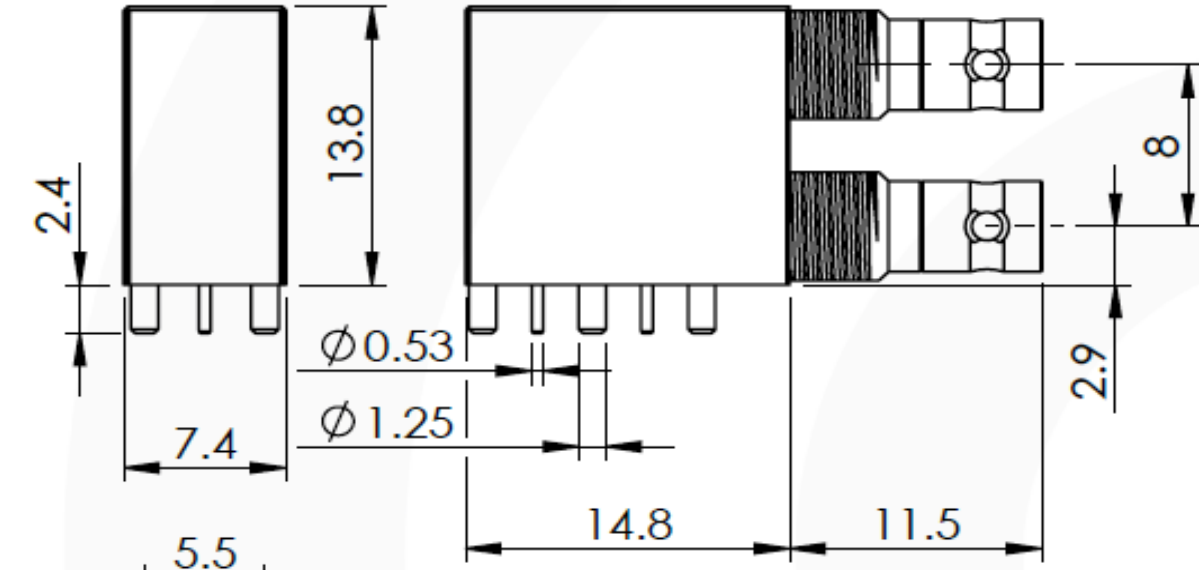

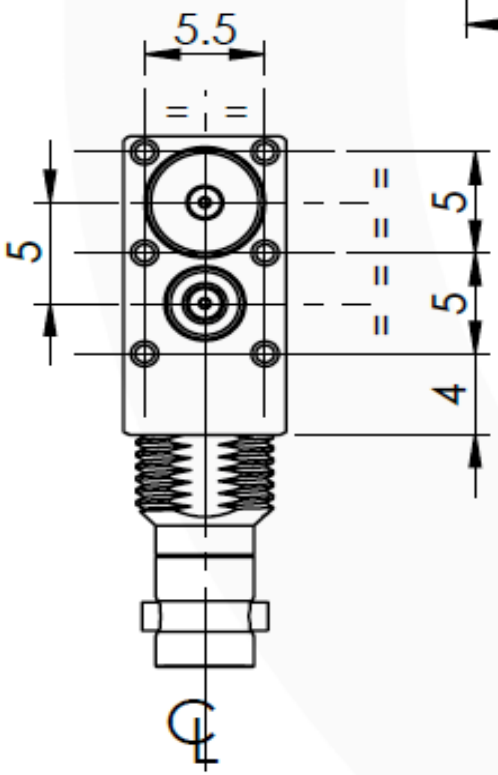

Recommended PCB Layout

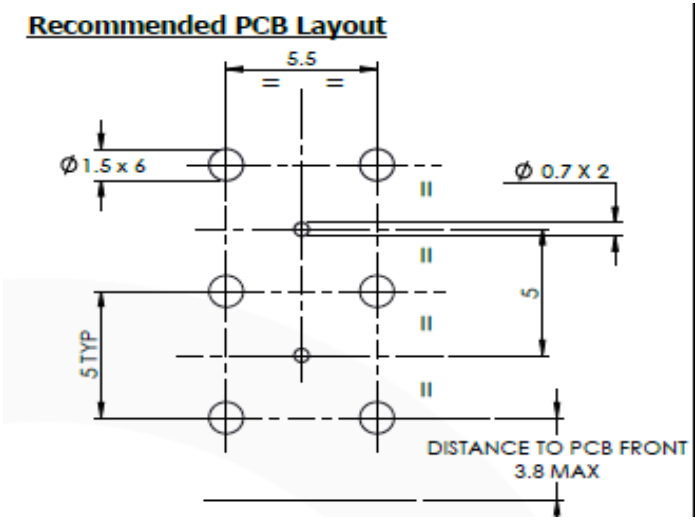

Recommended Mounting Hole

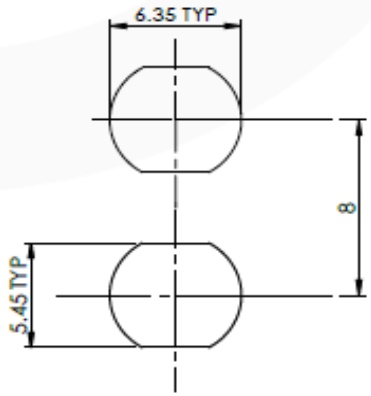

MAX PANEL THICKNESS : 3mm

images for illustration purposes only

Part Number: 92-67-468-2-B3

COAX CONNECTORS LTD