PRODUCT DATASHEET

SMA RIGHT ANGLE SURFACE MOUNT PCB JACK

30-467-D3

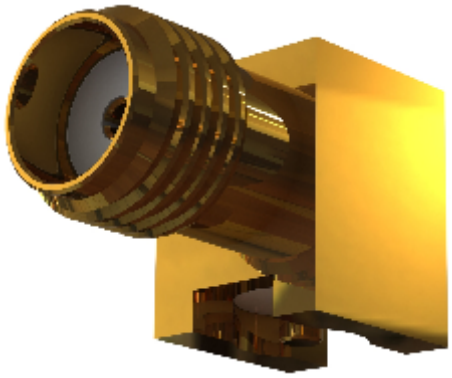

images for illustration purposes only

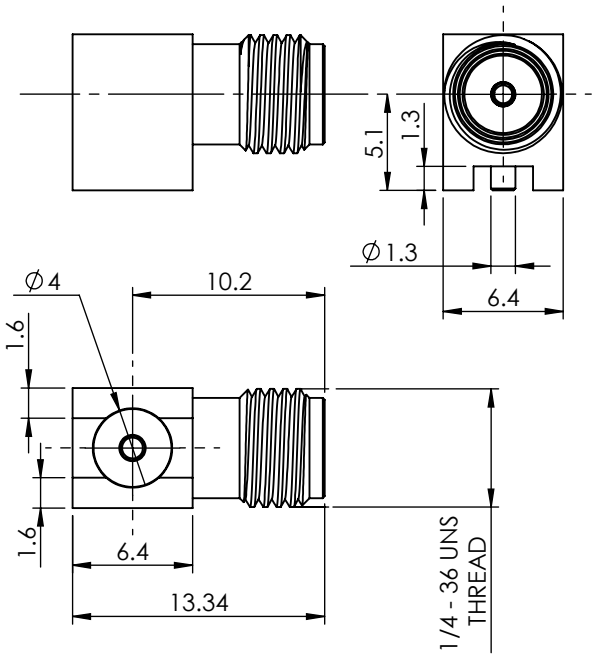

Environmental Specification

Operating Temp: -55 to +155 Deg C.

IP Rating (Mated): IP40

Electrical Specification

Impedance: 50 Ohm

Frequency: 0-18 GHz

Dielectric W/V: 750 Veff

Insulation res: 5000 M-Ohm

Mechanical Specification

Contact Retention: 20 N min

Cable Retention: Not Applicable

Mating cycles: 100

Weight: 2.72 g

Connector Interface

image for illustration purposes only

Recommended PCB Layout

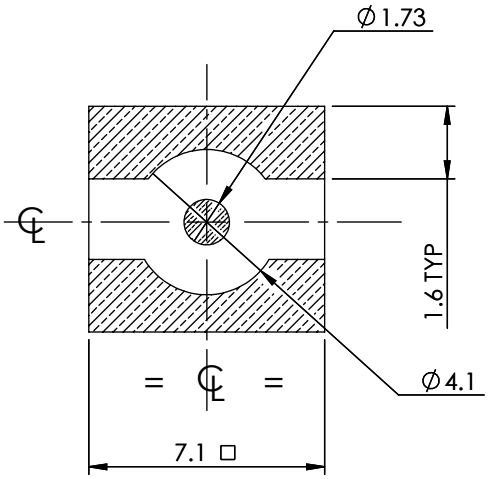

ITEM	DESCRIPTION	MATERIAL	PLATING
3	INSULATOR	PTFE	N/A
2	CENTRE CONTACT	BeCu	GOLD
1	BODY	BRASS	GOLD

A4	SHEET 1 OF 1	RoHS 2002/95/EC	DIMENSIONS ARE IN MILLIMETRES	
REVISION : A00		NAME	SIGNATURE	DATE
ISSUE : 0		DRAWN	IG	15/04/2013
		CHK'D	GE	18/04/2013
		APPV'D		

6-8 COLNE ROAD, TWICKENHAM, MIDDLESEX. TW1 4JR

THE INFORMATION IS GIVEN AS AN INDICATION ONLY AND IS SUBJECT TO CHANGE WITHOUT NOTICE. IN THE CONTINUAL GOAL TO IMPROVE OUR PRODUCTS,WE RESERVE THE RIGHT TO MAKE ANY MODIFICATIONS NECESSARY WITHOUT PRIOR NOTICE.

© 2011. THIS DOCUMENT IS THE PROPERTY OF COAX CONNECTORS LTD. REPRODUCTION OR COMMUNICATION IN ANY FORM TO A THIRD PARTY IS PROHIBITED WITHOUT PRIOR WRITTEN CONSENT

Tel: +44(0)20 8538 9090 Fax: +44(0)20 8538 9890 Email: info@coax-connectors.com

Model File: S:\CAD SYSTEM\Engineering Data\CAD Data\Solid Models\Z - Match IT SERIES\TOP LEVEL\SMA 10211

Cad File: S:\CAD SYSTEM\Engineering Data\CAD Data\Drawings\Z - Match IT SERIES\DATA SHEETS\30-467-D3