PRODUCT DATASHEET

SMA END LAUNCH JACK PCB MOUNT 30-410-D3

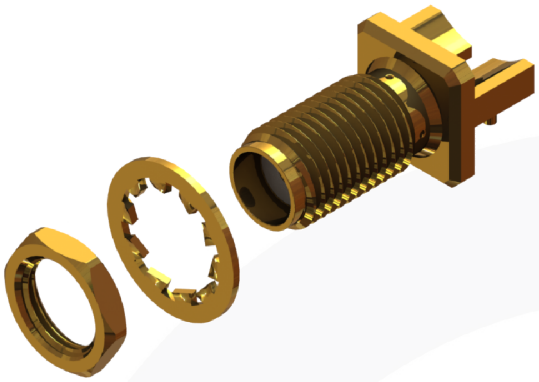

images for illustration purposes only

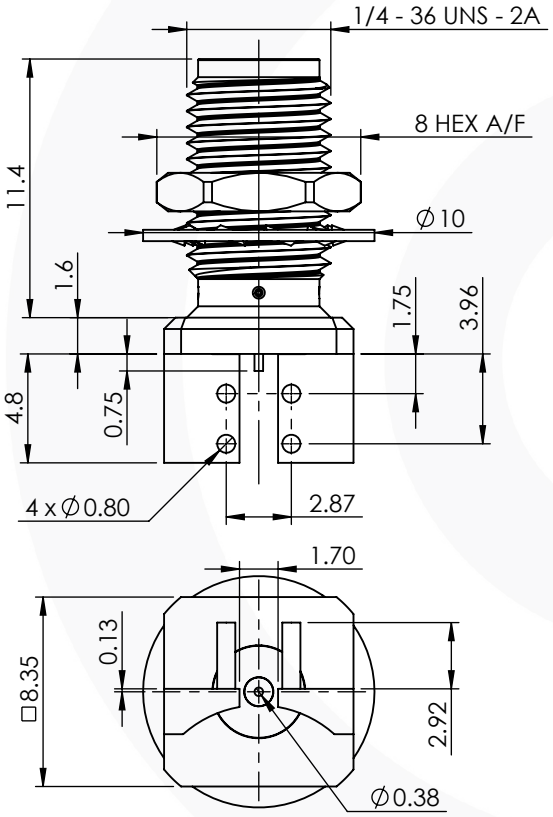

PCB LAYOUT - NOT TO SCALE

Not Applicable

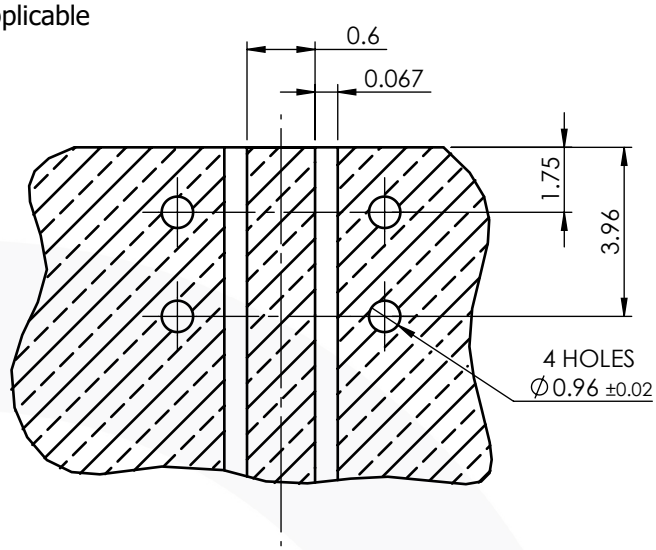

Based on Er = 4.2. PCB thickness = 1.6mm

Environmental Specification

Operating Temp: -55 to +155 Deg C.

IP Rating (Mated): NOT APPLICABLE

Electrical Specification

Impedance: 50 Ohm

Frequency: 0-18 GHz

Dielectric W/V: 750 Veff

Insulation res: 5000 M-Ohm

Mechanical Specification

Contact Retention: 18 N min

Cable Retention: Not Applicable

Mating cycles: 100

Weight: 3.23 g

Connector Interface

image for illustration purposes only

Panel Cutout Dimensions

MAX. PANEL THICKNESS = 3.2 mm

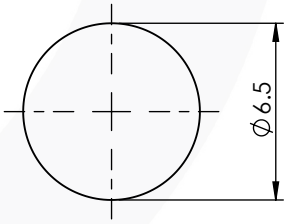

ITEM	DESCRIPTION	MATERIAL	PLATING
5	NUT	BRASS	GOLD
4	WASHER	STAINLESS STEEL	GOLD
3	INSULATOR	PTFE	N/A
2	CENTRE CONTACT	BeCu	GOLD
1	BODY	BRASS	GOLD

A4	SHEET 1 OF 1		DIMENSIONS ARE IN MILLIMETRES	
REVISION : E00			NAME	SIGNATURE	DATE
ISSUE : 1		DRAWN	GE		27/07/2015
		CHK'D	IG		27/07/2015
		APPV'D			

6-8 COLNE ROAD, TWICKENHAM, MIDDLESEX. TW1 4JR

THE INFORMATION IS GIVEN AS AN INDICATION ONLY AND IS SUBJECT TO CHANGE WITHOUT NOTICE. IN THE CONTINUAL GOAL TO IMPROVE OUR PRODUCTS,WE RESERVE THE RIGHT TO MAKE ANY MODIFICATIONS NECESSARY WITHOUT PRIOR NOTICE.

© 2011. THIS DOCUMENT IS THE PROPERTY OF COAX CONNECTORS LTD. REPRODUCTION OR COMMUNICATION IN ANY FORM TO A THIRD PARTY IS PROHIBITED WITHOUT PRIOR WRITTEN CONSENT

Cad File: C:\Fusion Components Ltd\CAD Data\Drawings\Z - Match IT SERIES\DATA SHEETS\30-410-D3

Model File: C:\Fusion Components Ltd\CAD Data\Solid Models\Z - Match IT SERIES\TOP LEVEL\SMA 10521

Tel: +44(0)20 8538 9090 Fax: +44(0)20 8538 9890 Email: info@coax-connectors.com